600W/648Wh Portable Power Station

Contents

Packing List / 01

Warnings and Precautions for Use / 01

Technical Parameter / 02

Product Description / 02

Introduction to the Display Interface / 03

Common Device Usage Time / 05

Common Problem / 05

Packing List

Outdoor power supply 600W

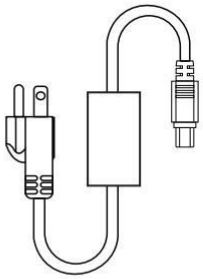

Charger

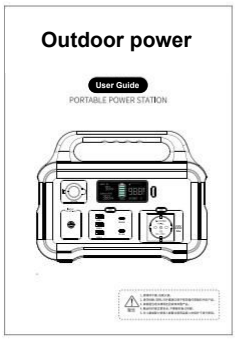

User Guide

Warnings and Precautions for Use

Read all instructions and follow basic precautions before using the product.

a. To reduce risk, close supervision is required when using the product near children.

b. The use of accessories recommended or sold by non-professional product manufacturers may lead to the risk of electric shock.

c. When the product is not in use, please pull out the power plug from the product socket.

d. It is forbidden to disassemble the product. After disassembling the product, it may cause unpredictable risks such as fire and electric shock.

e. It is forbidden to use this product with damaged wires or plugs, which may bring unpredictable risks such as electric shock.

f. Please use the product in a well-ventilated environment, keep the air outlet and air inlet open, and do not restrict the ventilation of the product in any way.

g. Please put the product in a ventilated and dry environment, avoid rain, humidity and other environments. Also keep away from high temperature and corrosive materials.

h. It is forbidden to leave the product in a car in direct sunlight for a long time. It is prohibited to use this product in a high temperature environment. (In a high temperature environment, the internal battery will overheat and the battery life will be shortened, etc.).

i. When not in use for a long time, please turn off the power supply and charge the device every three months to prevent the battery from running out of power during use.

WANROY TECHNOLOGY COMPANY LIMITED | ROOM 13, 27/F,HO KING COMMERCIAL CENTRE,2-16 FA YUEN STREET,MONGKOK,KOWLOON,HONGKONG
WhatsApp: +86 189 2675 1724
E-Mail: support@wanroytech.com
WANROYTECH.COM

Technical Parameter

battery capacity	Cycles	weight	size	USB-A*3	Cigarette port*1
lithium battery 230V(648Wh)	> 2000	6 KG	295*155*169mm	QC3.0-18W	12V/10A
AC Output*1	Type-C *1	Type-C *1	DC Input	MPPT Input	LED lights
AC Output: 600W	PD-60W	PD-18W	12-24V	Support 12-30V Solar Panel	SOS/5W

Operating Temperature	Recharging Temperature	Management System
−10~40˚C	0~40˚C	Under voltage Protection Over voltage Protection Over current in Charge/Discharge Protection Short Circuit in Charge/Discharge Protection Over temperature in Charge/Discharge Protection Overcharging Voltage Protection

Product Description

This product is a portable energy storage power supply, suitable for homeemergency backup power, outdoor travel, emergency disaster relief, fieldwork and other applications.

The product has a built-in lithium battery, which supports various chargingmethods such as chargers and solar photovoltaic panels.

The output port is 50Hz, and outputs a continuous and stable sine wavealternating current, which better protects the electrical appliances.

WANROY TECHNOLOGY COMPANY LIMITED | ROOM 13, 27/F,HO KING COMMERCIAL CENTRE,2-16 FA YUEN STREET,MONGKOK,KOWLOON,HONGKONG
WhatsApp: +86 189 2675 1724
E-Mail: support@wanroytech.com
WANROYTECH.COM

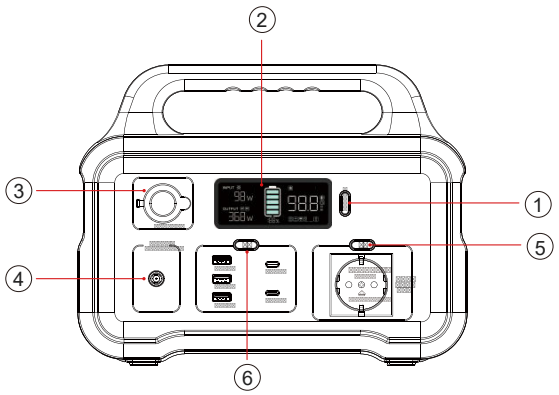

① Main power switch
② LED screens
③ Cigarettes
④ DC Input
⑤ AC switch
⑥ DC switch

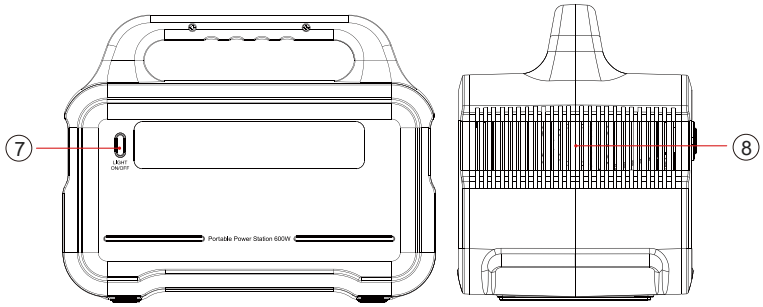

⑦ Light switch
⑧ Cooling air ducts

Introduction to The Display Interface

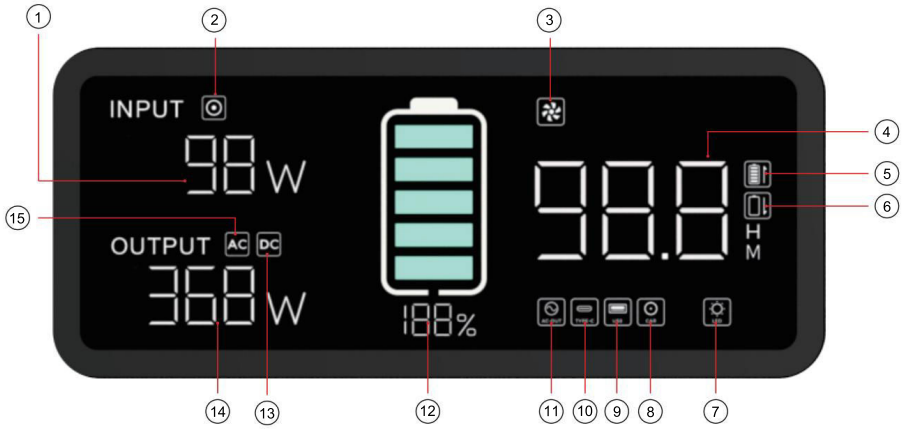

① Input total power
② DC(24V5A)/PV(12-30V100W) input
③ Fan status
④ Remaining usage/charging time
⑤ State of charge
⑥ Discharge status
⑦ LED lights
⑧ Cigarette port (12V) output
⑨ USB output (QC3.0 18W max)
⑩ Type-C output
⑪ AC output
⑫ Battery percentage 11 AC outp
⑬ DC output
⑭ Total output power
⑮ AC output

WANROY TECHNOLOGY COMPANY LIMITED | ROOM 13, 27/F,HO KING COMMERCIAL CENTRE,2-16 FA YUEN STREET,MONGKOK,KOWLOON,HONGKONG
WhatsApp: +86 189 2675 1724
E-Mail: support@wanroytech.com
WANROYTECH.COM

Screen Display Precautions

This icon lights up, please make sure that the vents are not blocked.

It is not displayed by default, and the display icon is turned on after the low temperature alarm value is set.

It is not displayed by default, and the display icon is turned on after the high temperature alarm value is set.

it is not displayed by default, and the display icon is turned on after the fault alarm state is set.

Product Charging Diagram

- ### Mains charging

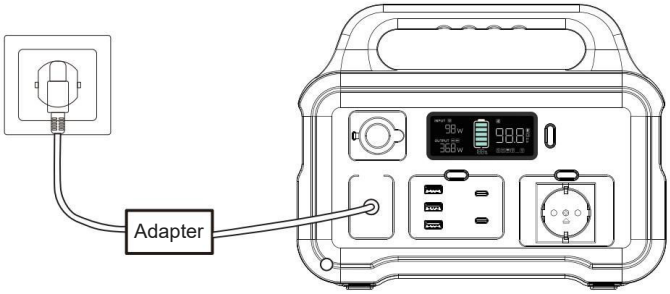

- ### Solar charging

1. The charging voltage of the solar panel needs to be in the range of 12-30. When it exceeds 30v, the device will trigger overvoltage protection

2. If the solar panel is not used for charging and the equipment is damaged, free after-sales service will not be provided.

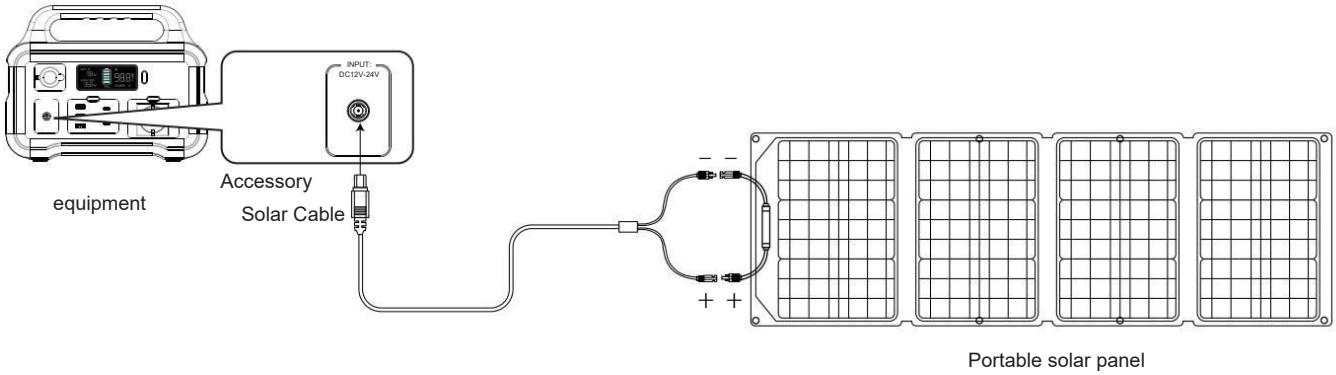

WANROY TECHNOLOGY COMPANY LIMITED | ROOM 13, 27/F,HO KING COMMERCIAL CENTRE,2-16 FA YUEN STREET,MONGKOK,KOWLOON,HONGKONG
WhatsApp: +86 189 2675 1724
E-Mail: support@wanroytech.com
WANROYTECH.COM

Common Device Usage Time

Here are some common devices and their power requirements for each charging port.

DC Output

Car Fridge(60W)
Around 45 Hours

Drone(90W max)
Around 11 Recharges

AC Output

12" Macbook(30W)
Around 8 Recharges

32"TV(60W)
Around 9 Hours

CPAP Machine
Around 15~45 Hours

USB Output

Smartphone(18W max)
Around 63 Recharges

Motion Camera(5W max)
Around 110 Recharges

Common Problem

1. The power of the device is within the rated output power range of the product but itcannot be used?

a. The power of the product is low and needs to be supplemented
b. When some electrical appliances are started, the peak value ishigher than the power of the product, or the nominal power of the electrical appliance isgreater than the power of the product.

2. Why is there a sound when using it?

The product adopts an intelligent chip control system, When the temperature of the productrises, the built-in fan will be automatically activated to cool down. There is a slight noise.which is a normalphenomenon.

3. Is it normal for the charging cable to heat up during use?

It is normal for the charging cable to heat up during charging. The standard charging cableconforms to national safety standards, so you can use it with confidence.

WANROY TECHNOLOGY COMPANY LIMITED | ROOM 13, 27/F,HO KING COMMERCIAL CENTRE,2-16 FA YUEN STREET,MONGKOK,KOWLOON,HONGKONG
WhatsApp: +86 189 2675 1724
E-Mail: support@wanroytech.com
WANROYTECH.COM